WIRING DIAGRAM

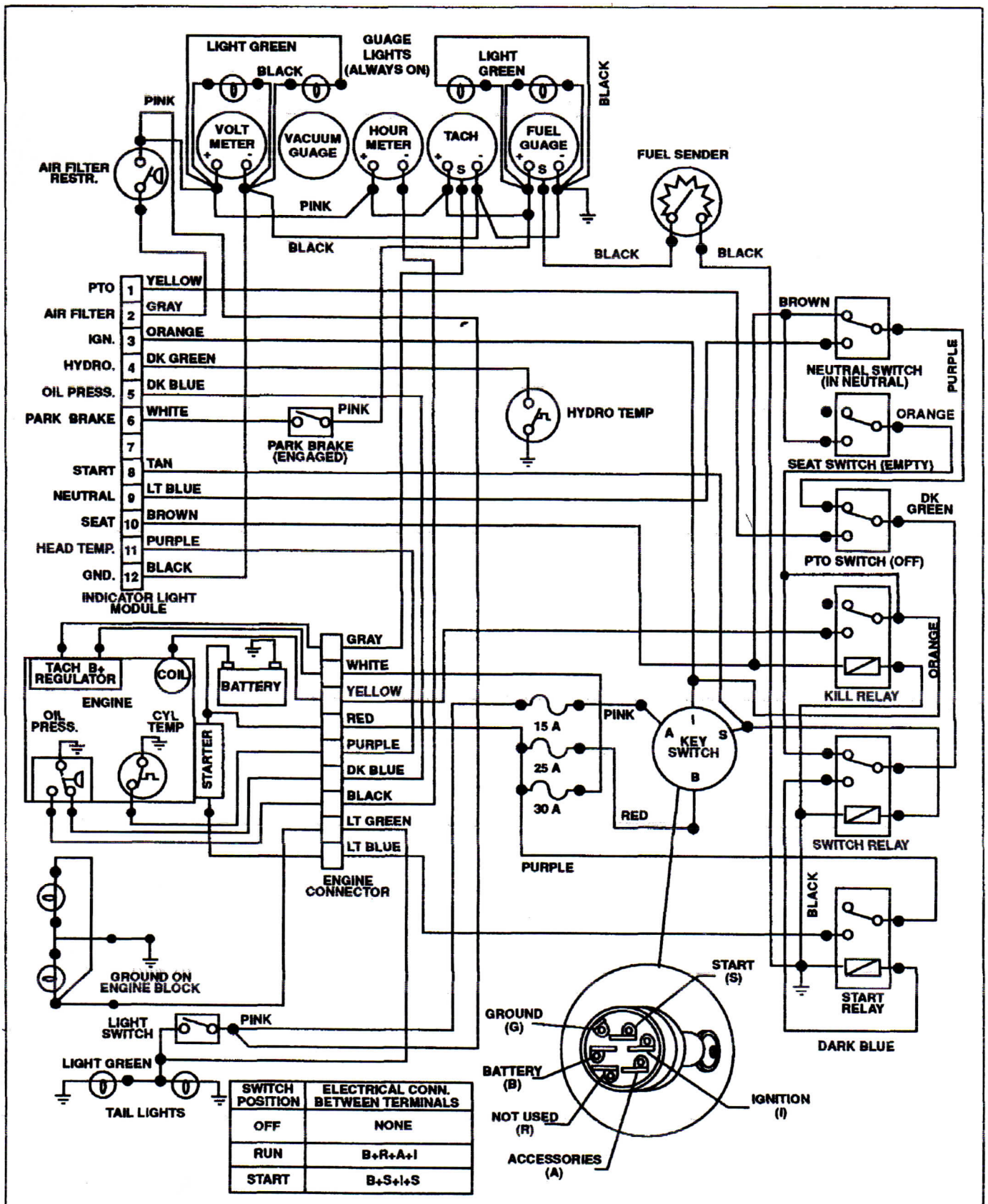

SWITCH POSITION	ELECTRICAL CONN. BETWEEN TERMINALS
OFF	NONE
RUN	B+R+A+I
START	B+S+I+S

TORO Wheel Horse®